May 2021

Dear Valued Customers,

SIGMAKOKI CO., LTD.
Sales Department

Notice of change in parts used for precision lab jacks
(LJ-80133 and LJA-80133)

Thank you very much for your constant patronage.

We will change the clamp screws of the **precision lab jacks (LJ-80133 and LJA-80133 series)** to "low-head screws". The products after the change of the clamp screw will be shipped at any time.
Should you have any questions or concerns, please do not hesitate to contact us.
Thank you for your continued support.

Sincerely

Precision Lab jacks Catalogue code：W7055, W7136

Applicable part number	LJ-80133, LJA-80133, LJA-80133-M6, LJA-80133UU
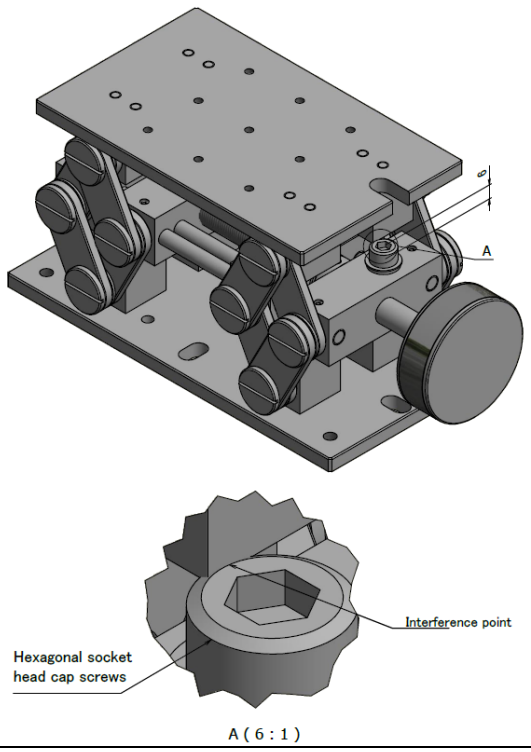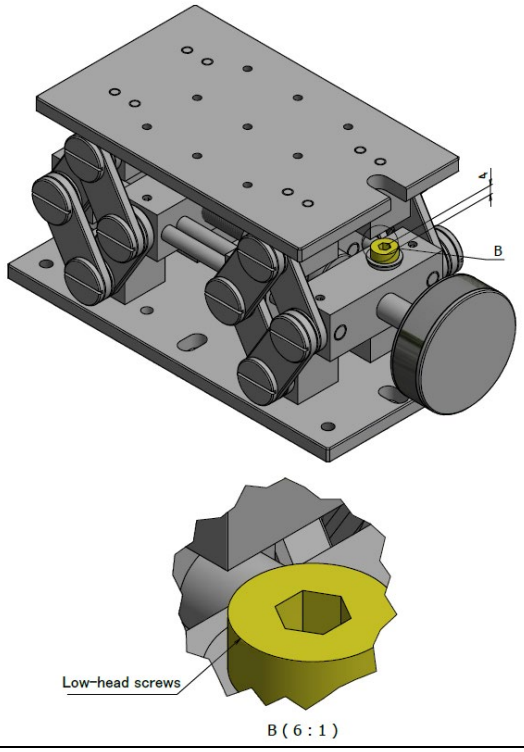
Current product	After change in the parts used